CRANE MATERIALS INTERNATIONAL

TIMBERGUARD®
Marine Piling and Timber

Updated August 31, 2012

TG End Cap

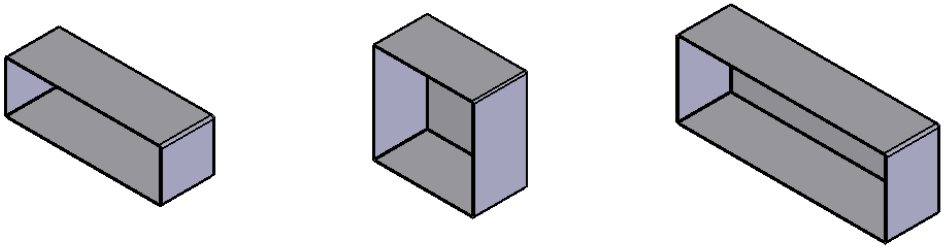

Available Sizes	2x4, 2x6, 2x8, 2x10, 2x12, 3x6, 3x8, 3x10, 3x12, 4x4, 4x6, 4x8, 4x12, 6x6, 6x8, 8x8, 8x12, 10x10, 12x12
Available Colors	Clay, Grey

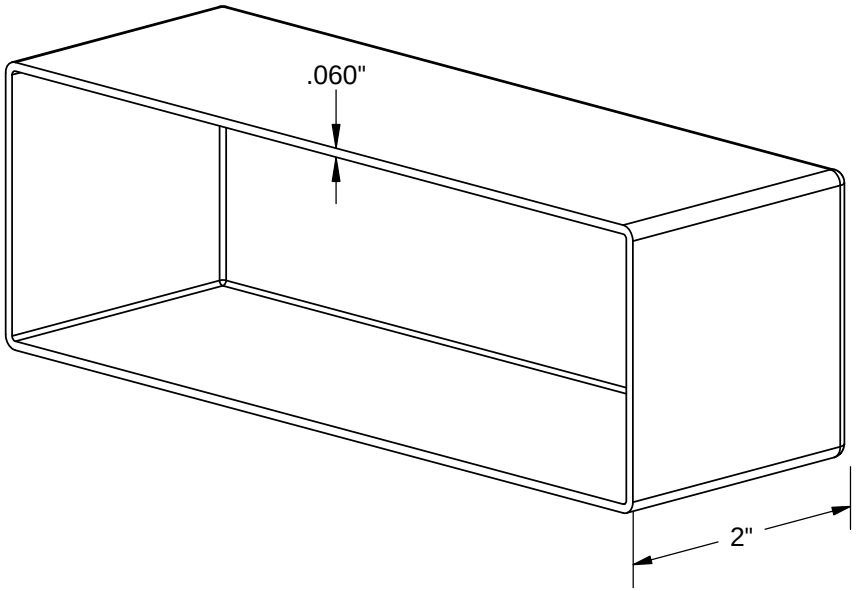

Physical properties are defined by ASTM testing standards, The Aluminum Association Design Manual, The Naval Facilities Design Manual DM 7.2, and The US Army Corps of Engineers General Design Guide: PVC Sheet Pile and/or standard engineering practice. The values shown are nominal and may vary. The information found in this document is believed to be true and accurate. No warranties of any kind are made as to the suitability of any CMI product for particular applications or the results obtained there from. Crane Materials International is a Crane Building Products® company. ShoreGuard®, The ShoreGuard Seawall System™, C-Loc®, TimberGuard®, GeoGuard®, Dura Dock®, Shore-All®, GatorGates®, GatorDock Elite™, ArmorWare™, ArmorRod™, Box Profile™, UltraComposite™, The Steel Alternative™, Elite Wall™, Elite Panel™, Elite Fascia Panel™, FlatPanel™, XCR™, XCR Technology™, XCR Vinyl™, GatorBridge™, GatorAluminum™, Gator Sheet Piling™, GatorDock™, I-Beam Lock ™, Textured Slate™, Crane Materials International™ logo, CMI Sheet Piling Solutions™, Aqua Terra System™, Endurance™, Endurance CSP™, Polaris™, Eclipse™, GridSpine™, 21 Poly™, PileClaw™, SheerScape™, SheerScape Retaining Wall Systems™, Sheer Panel™ and CMI Waterfront Solutions™ are trademarks, service marks or trade names of Crane Materials International. CRANE MATERIALS INTERNATIONAL products are covered by one or more of the following U.S. Patents and International Patents: 4,674,921; 4,690,588; 5,292,208; 5,145,287; 6,000,883; 6,033,155; 6,053,666; D420,154; 6,575,667; 7,059,807; 7,056,066; 7,025,539; 7,393,482; 5,503,503; 5,803,672; 6,231,271; 1,245,061CA; 7,914,237 and other patents pending.

© 2012 Crane Materials International
4501 Circle 75 Parkway, Suite E-5370 Atlanta, GA 30339 USA Phone 866-730-9210 INTL 001-770-933-8148 Fax 770-933-8363